City of Washington
NORTH CAROLINA

REQUEST FOR PROPOSALS

City of Washington

WAYFINDING SIGNAGE PROGRAM
Fabrication and Installation

Deadline for Response

July 22, 2016 4:00 p.m.

Respond To:

City of Washington
Dept. of Community and Cultural Services
102 East 2nd Street
Washington, NC 27889

John Rodman, Director
Community and Cultural Services
252-975-9384
jrodman@washingtonnc.gov
www.washington-nc.com

Wayfinding Signage Program

Table of Contents

1. **Overview**
2. **Goals**
3. **Description**
4. **Requests for Proposals**
5. **Notice to Bidders**
6. **Terms and Conditions**

   Questions regarding the RFP
   RFP Addenda
   Withdrawal Due to Error
   Rejection of Proposals
   Proposal Modification
   Proposal Validity Period
   Proposal Signatures
   Non Endorsement
   Insurance Requirement
   Owner ship of Documents
   Hold Harmless

7. **Instructions to Bidders**

   Proposals
   Scope of Work
   Notes
   Submittal Requirements

8. **Sample Letter of Transmittal**
9. **Sample Bid Form**
10. **Sample Warranty/Guarantee**

Appendix – Base Bid – Phase 1A

Appendix A: Proposed Sign Index and Map
Appendix B: Sign Type – Sign Message Plan

Appendix – Alternative Bid – Phase 1B

Appendix C: Proposed Sign Index and Map
Appendix D: Sign Type – Sign Message Plan

Appendix – Final Concepts - Sign Specifications

Appendix E: Final Concepts
Appendix F: Sign Specifications

Appendix – Forms

Letter of Transmittal
Bid Form
Warranty/Guarantee

WAYFINDING SIGNAGE PROGRAM

The City of Washington's Department of Community and Cultural Services, working under the direction of the City Manager, is soliciting proposals from qualified firms and/or teams to complete specifications fabrications, and installations for the implementation of a wayfinding signage program within the City of Washington with a concentration on the Downtown Harbor District.

OVERVIEW

Washington is a City of approximately 10,000 residents located on the north shore of the Tar-Pamlico River in eastern North Carolina. Washington is well-regarded for its unique small-town feel. The City's array of historic sites, waterfront harbor district, and charming downtown shopping contribute to the vibrancy of Washington's atmosphere. In recent years, the City has implemented various economic development programs and improvements, including Festival Park, the Lighthouse Restrooms and Boaters Facility, and a municipal pier to attract local and regional shoppers to the City's retail areas and other points of interest.

GOALS

The primary goal of this project is to establish a program for wayfinding signage to serve residents and visitors to the City of Washington. The focus of the wayfinding system will be signs within the public right-of-way.

The program will be successful if it:

1. Enhances visitors' and locals' ability to easily navigate into and around the City of Washington and to find desired destinations (including parking).

2. Supports and promotes the distinct identity for the City of Washington.

3. Raises community and visitor awareness of the Downtown Waterfront and its location.

4. Enhances the success and market potential for arts, entertainment, retail, dining and economic growth and development.

5. Decreases signs clutter on many of the main roadways and intersections by combining many of these individual signs, possibly grouping them on a larger sign.

DESCRIPTION

The wayfinding signage program will direct motorists, residents and visitors, to the City's various points of interest, services, facilities, institutions and downtown area. The signs will have a distinct design, reflecting the existing symbols and branding images for the City of Washington.

The appearance of the signs will remain fairly uniform to indicate to the motorist, that this is an integrated sign system and that additional similar signage can be expected as they travel within the City area.

REQUEST FOR PROPOSALS

Notice is hereby given that proposals will be received by the City of Washington for an **RFP for the Washington Wayfinding Signage Program** for the fabrication and installation of wayfinding signage throughout the City of Washington, NC.

NOTICE TO BIDDERS

Sealed bids will be received until 4:00 pm on **July 22, 2016** and then evaluated by the City of Washington Planning and Development Office, Washington Municipal Building, located at 102 East 2nd Street, Washington, NC 27889, for the **Washington Wayfinding Signage Program, Washington, NC.**

The project includes producing shop drawings, fabrication and installation of wayfinding signage including: Primary Gateway Signs, Secondary Gateway Signs, Secondary Destination Signs, Parking Signs (both post mounted & light pole attached) and Destination Identity Signs throughout the City. Bids are being solicited only from responsible and established bidders known to be experienced and regularly engaged in the work of signage fabrication and installation. Satisfactory evidence that the bidder has the necessary capital, equipment and personnel to do the work may be required. Obtain placement plan, message plan, and sign design package at the City of Washington Planning Office during regular City office hours. The Office is located at 102 East 2nd Street.

This will be a formal purchase contract bid. The bids will be evaluated and contract will be awarded in accordance with the statutory requirements. All bidders must meet the licensing requirements under Chapter 87 of the N.C. General Statues. Small Business Entities, Women Owned Businesses and Minority Owned Businesses are encouraged to submit bids. The City reserves the right to reject any and all bids and to accept such bids as appears in its judgment to be in the best interest of the City. The City reserves the right to waive any informality.

TERMS AND CONDITIONS

Questions Regarding the RFP

Oral interpretations of the RFP or the specifics about certain forms are not binding on the City. Requests for interpretation, modification or clarification must be made in writing or e-mail and submitted to:

John Rodman, Director, Cultural and Community Services
Phone (252) 975-9384
jrodman@washingtonnc.gov

RFP Addenda

The City of Washington reserves the right to request that any respondent clarify their proposal or to supply any additional material(s) deemed necessary to assist in the evaluation of the proposal. The City reserves the right to change the RFP schedule or to issue addendums to the RFP at any time. Further, the City reserves the right to cancel or reissue the RFP. Any and all addenda issued shall become part of the RFP.

Withdrawal Due to Error

Submissions may be withdrawn at any time prior to the submittal deadline, provided notification of withdrawal is received in writing. Verbal notification of withdrawal will not be acknowledged.

Rejection of Proposals

The City reserves the right to reject any or all proposals, to waive any minor informalities or irregularities contained in any proposal and to accept any proposal deemed to be in the best interest of the City regardless of the proposal's content or completeness.

Proposal Modification

Modification of a proposal already received will be considered only if the request is received prior to the submittal deadline. All modifications must be made in writing, executed and submitted in the same form and manner as the original proposal. Verbal modifications will not be acknowledged. Submissions cannot be changed or altered after the close of this RFP.

Proposal Validity Period

Submission of a proposal will signify the vendor's agreement that their proposal, and the content thereof, are valid for ninety (90) days following the submission deadline unless otherwise agreed to in writing by all parties. The proposal will become part of the contract that is negotiated between the City and the successful vendor.

Proposal Signatures

An authorized representative must sign each submission and the vendor's current address and telephone information must be provided. Unsigned proposals will not be considered. The name, mailing address and signature of the individual responsible for binding the vendor contractually must be shown. Further, all appropriate tax information (Federal Tax ID, SSN, etc.) must be noted.

Non Endorsement

As a result of the selection to supply products and / or services to the City of Washington the Vendor agrees to make no reference to either City in any literature, promotional material, brochure, sales presentation or the like without the express written consent of the City.

Insurance Requirement

The selected vendor must comply with the insurance requirements of the City of Washington and such requirements will be set forth in the agreement with the selected vendor. Requirements can be obtained by contacting the staff contact in writing before the bid deadline.

Ownership of Documents

Any reports, studies, conclusions and / or summaries prepared in the development of this RFP shall become the property of the City upon the submission of the vendor's proposal.

Hold Harmless

After receiving award of this RFP, the successful vendor must enter into an agreement that will indemnify the City, their officers, agents and employees from any liability that may have occurred during the development of this project.

INSTRUCTIONS TO BIDDERS

July 22, 2016

Proposals:

Proposals should include:

- A breakdown of the total bid amount for both fabrication and for installation for both the **Base Bid – Phase 1A** and the **Alternate Bid – Phase 1B.**
- An overall schedule that includes a timeline for fabrication and for installation.
- Detailed information about your company, your experience in developing similar signage programs, and detailed information about consultants that you will partner with on this project if appropriate.
- Three references for wayfinding and/or similar projects along with images of those signs.
- Details about the recommended materials to be used in the fabrication of the signs that will ensure durability, wind-resistance, color longevity, and affordability.

Scope of Work:

The successful bidder will oversee the development and installation of the City Wayfinding Signage Program and coordinate any revision or alterations to the existing design and/or plan. Once awarded, the Contractor will be responsible for all of the work surrounding the successful deployment of this wayfinding program, including, but not limited to:

1. Conduct a detailed assessment of the proposed signage.
2. Create construction documents, shop drawings, engineering plans and to ensure that the existing design is functionally sound.
3. Work with City staff to ensure that the graphic needs of their logos, colors and artwork and any other requests are considered.
4. Recommend materials that may better serve the function of the signage while being considerate of the existing design.
5. Expertly fabricate and deliver all of the components of the wayfinding program. This may include the design and development of components that do not currently exist in the plan.
6. Vendor shall provide a five year written warranty on all materials and workmanship for sign structures (see attached).
7. Install each component with consideration of the surrounding environment, line-of-sight, MUTCD standards and NCDOT regulations.
8. Work with NCDOT and develop all necessary forms to allow for the successful use of NCDOT right-of-way.

9. Work with private land owners to establish easements and land use in the event that existing right-of-way is not viable.

Scope of work shall include producing shop drawings, fabricating and installing the following signs:

Base Bid – Phase 1A

16 Secondary Destination Signs
3 Primary Gateway Signs
2 Secondary Gateway Signs
7 Parking Signs (post)
7 Parking Signs light pole attached

Alternate Bid – Phase 1B

10 Secondary Destination Signs
2 Downtown Gateway Signs
2 Parking Signs (post)
1 Destination Identity Sign

Notes:

- All bidders must meet any applicable licensing requirements under Chapter 87 of the N.C. General Statues.
- Contractor is responsible for understanding scope of work.
- The project shall be completed within 240 days of the Notice to Proceed.
- The Contractor awarded the project will be required to:
  - Execute the Independent Contractor Agreement
  - Execute the E-Verify Statement
  - Provide a W-9 form
  - Provide certificate of insurance for general liability and workers' compensation coverage with City of Washington named as a certificate holder
- For purposes of this bid, assume enough trips for site visits for development of shop drawings and additional visits for installation.
- For purposes of this bid, demolition or removal of existing signs, as specified, is not included in the scope of work.
- Taxes are to be included in the sign fabrication cost.

Submittal Requirements:

- Submit Letter of Transmittal.
- Complete and execute Bid Form.
- Three references for similar work performed in the past five years. List the date services were performed and the contact information of an individual possessing knowledge of the firm's work.

Sealed bids will be received until **4:00pm on July 22, 2016** and then evaluated by the City of Washington Planning and Development Office, Washington Municipal Building, located at 102 East 2nd Street, Washington, NC 27889. ALL BIDS ARE TO BE MARKED "WASHINGTON WAYFINDING SIGNAGE PROGRAM".

A pre-proposal conference may be held with the Department of Planning and Development by requesting such meeting with the Department by calling 252-975-9383 and scheduling a time.

LETTER OF TRANSMITTAL
(sample)

I, (name)_____, (title)_____

for (company)_____, confer this statement of transmittal with the submission of our proposal to the City of Washington.

(company)_____is submitting this proposal in full receipt and understanding of the terms provided by the City for the RFP- Wayfinding Signage Program – Fabrication and Installation. I am submitting this proposal as an authorized representative of (company)_____and fully capable of binding the company contractually.

_____

Company

_____

Authorized Signer Signature

_____

Title Date

BID FORM (page 1 of 3)

(sample)

WASHINGTON WAYFINDING SIGNAGE

The Bidder agrees to perform all the work as shown on the plans and specifications, and to furnish all labor, tools, equipment, transportation and all other incidentals necessary for completion of WASHINGTON WAYFINDING SIGNAGE PROGRAM.

In compliance with the Notice to Bidders, Instructions to Bidders, the Contract Documents which include the contract plans and specifications titled "WASHINGTON WAYFINDING SIGNAGE" and all addenda issued to date, all of which are part of this proposal, the undersigned hereby proposes to furnish and install all materials, labor, and equipment called for by, and in strict accordance with, said Contract Documents, for the complete Scope of Work indicated:

TOTAL BASE BID (lump sum) **Phase 1A** $_____

_____

Write out total dollar amount in words

PER UNIT COST: total must equal Base Bid above.

Sign Quantity	Sign Type	Per Unit Fabrication Cost	Per Unit Installation Cost	Total Cost
16	Secondary Destination Signs	$	$	$
3	Primary Gateway Signs	$	$	$
2	Secondary Gateway Signs	$	$	$
7	Parking Signs (post)	$	$	$
7	Parking Sign (pole attached)	$	$	$
Shop Drawings				$
Total Base Bid				$

BID FORM (page 2 of 3)
(sample)

TOTAL ALTERNATE BID (lump sum) **Phase 1B** $_____

_____
Write out total dollar amount in words

PER UNIT COST: total must equal Alternate Bid above.

Sign Quantity	Sign Type	Per Unit Fabrication Cost	Per Unit Installation Cost	Total Cost
10	Secondary Destination Signs	$	$	$
2	Downtown Gateway Signs	$	$	$
2	Parking Signs (post)	$	$	$
1	Destination Identity Sign	$	$	$
Shop Drawings				$
Total Alternate Bid				$

- The bid amounts shall be shown in both words and figures. In case of discrepancy, the amount in words shall govern.
- The above prices for sign fabrication cost shall include signs, posts, hardware, materials, shipping, taxes, overhead, profit, etc., to cover the finished work called for.
- The above prices for installation cost shall include mobilization, equipment, materials, travel expenses, site repair, clean-up, overhead, profit, etc., to cover the finished work called for.
- The above price for shop drawings cost shall include site surveys, engineering, production drawings, submittals, samples, overhead, profit, etc., to cover the finished work called for.
- The Bidder agrees that this bid shall be valid and may not be withdrawn for a period of 90 calendar days after the scheduled closing time for receiving bids.
- Bidder has examined copies of all the Bidding Documents and of the following Addenda (receipt of all which is hereby acknowledged):

BID FORM (page 3 of 3)
(sample)

Date	Addendum Number
_____	_____
_____	_____
_____	_____

Respectfully submitted this _____ day of _____, 2016.

_____
Company

WARRANTY/GUARANTEE
(sample)

We hereby warranty and guarantee the signs, which we have delivered in accordance with the provisions of the City of Washington Wayfinding Signage Program, for five years from the date of delivery and acceptance by the City of Washington.

We warrant and guarantee that the materials and finishes furnished under this contract are the highest quality and new unless otherwise required or permitted by the contract documents; that the work will be free from defects not inherent in the quality required or permitted; and that the work conforms with the requirements of the contract documents.

We agree to repair or replace, to the satisfaction of the City of Washington, any or all work not conforming to the contract documents, including substitutions not properly approved and authorized, workmanship or materials that prove defective within the warranty/guarantee period. This warranty/guarantee excludes remedy for damage or defect caused by abuse, modifications not executed by the Vendor or normal wear and tear under normal usage. Any work which may be damaged or displaced by the abuse, modifications not executed by the Vendor, improper, or insufficient maintenance, or improper operation shall also be excluded.

Any repairs or replacements shall bear an additional 12 month guarantee, in addition to any remaining warranty period, as herein stated, dated from the final acceptance of repairs or replacement.

In the event of our failure to comply with the above-mentioned conditions within a reasonable time after being notified in writing, we collectively and separately do hereby authorize the City of Washington to proceed to have defects repaired and made good at our expense, and will pay the costs and chargers; therefore, immediately upon demand.

_____
Signature of Vendor

_____
Date

City of Washington
Wayfinding Signage Program

Base Bid

Appendix A:

Phase 1A
Proposed Sign Index
and Map

City of Washington Wayfinding Signage Program
Proposed Signs - Phase 1A

No.	Description	Type	Location	Estimate	Design	Phase	Reason
SD1	McConnell Sports Complex Historic Downtown Waterfront Visitors Center Festival Park	Secondary Destination	5th off Clarks Neck		J	1A	To direct drivers from the outskirts of town to nearby destinations and to the downtown area
SD3	McConnell Sports Complex Historic Downtown Waterfront Visitors Center Festival Park	Secondary Destination	Carolina Ave off 15th		J	1A	To direct drivers from the outskirts of town to nearby destinations and to the downtown area
SD7	Historic Downtown Waterfront NC Estuarium Visitors Center Festival Park	Secondary Destination	Bridge at Main St South Bound		J	1A	To direct northbound drivers to the downtown destinations
SD9	Historic Downtown Waterfront NC Estuarium Visitors Center/Chamber Festival Park	Secondary Destination	Market & 15th South Bound		J	1A	To direct southbound drivers to nearby destinations
SD14	Historic Downtown Waterfront NC Estuarium Visitors Center Festival Park	Secondary Destination	Hwy 17 @ Main North Bound		J	1A	To direct northbound drivers to downtown destinations. Consider replacing with PD1
SD15	Historic Downtown Waterfront NC Estuarium Visitors Center Festival Park	Secondary Destination	Market @ 5th South Bound		J	1A	To direct southbound Market Street drivers to downtown destinations
SD23	Historic Downtown Waterfront NC Estuarium Visitors Center Festival Park	Secondary Destination	5th @ Market West Bound		J	1A	To direct westbound Market Street drivers to downtown
SD24	Historic Downtown Waterfront NC Estuarium Visitors Center Festival Park	Secondary Destination	5th @ Market East Bound		J	1A	To direct eastbound Market Street drivers to downtown
SD25	McConnell Sports Complex Historic Downtown Waterfront Visitors Center Havens Gardens	Secondary Destination	John Small Ave @ 15th West Bound		J	1A	To direct westbound 264 drivers to high priority destinations

No.	Description	Type	Location	Estimate	Design	Phase	Reason
SD29	Historic Downtown Waterfront NC Estuarium Visitors Center Festival Park	Secondary Destination	5th @ Carolina Ave East Bound		J	1A	To direct eastbound 5th Street drivers downtown
SD30	Historic Downtown Waterfront NC Estuarium Visitors Center Festival Park	Secondary Destination	Carolina Ave @ 5th South Bound		J	1A	To direct southbound Carolina Ave drivers downtown
SD36	NC Estuarium Festival Park Civic Center Parking	Secondary Destination	At the end of Market int with Water		J	1A	To direct drivers to downtown destinations
SD37	Turnage Theater Visitors Center Festival Park Civic Center	Secondary Destination	Main Street @ Gladden		J	1A	To outline downtown destinations upon entering the district
SD38	McConnell Sports Complex Aquatics & Fitness Center	Secondary Destination	Springs Road East Bound		J	1A	To direct driver to sports destinations
SD39	NC Estuarium Visitors Center Festival Park Parking	Secondary Destination	Market int with Main South Bound		J	1A	To direct driver to downtown destinations
SD40	NC Estuarium Visitors Center Festival Park Parking	Secondary Destination	Main int with Market East Bound		J	1A	To direct driver to downtown destinations
PG1/SG	Welcome to Washington	Primary/Secondary Gateway	US Hwy 17 North Bound		D	1A	To welcome northbound Hwy 17 drivers
PG2	Welcome to Washington	Primary Gateway	5th Street East Bound		A	1A	To welcome eastbound 5th Street drivers
PG3	Welcome to Washington	Primary Gateway	US Hwy 17 South Bound		A	1A	To welcome southbound Hwy 17 drivers
PG4	Welcome to Washington	Primary Gateway	John Small Ave East Bound		A	1A	To welcome westbound John Small Ave drivers

No.	Description	Type	Location	Estimate	Design	Phase	Reason
SG1	Welcome to Washington	Secondary Gateway	Market Street Ext South Bound		D	1A	To welcome southbound Market Street drivers downtown
PK3	Public Parking	Parking Lot	Court House adjacent		K	1A	Parking (pole)
PK4	Public Parking	Parking Directional	2nd before Gladden West Bound		H	1A	Parking (post)
PK5	Public Parking	Parking Lot	Stewart Parkway		K	1A	Parking (pole)
PK6	Public Parking	Parking Lot	Stewart Parkway		K	1A	Parking (pole)
PK7	Public Parking	Parking Lot	Stewart Parkway		K	1A	Parking (pole)
PK8	Public Parking	Parking Lot	Stewart Parkway		K	1A	Parking (pole)
PK10	Public Parking	Parking Lot	Stewart Parkway		K	1A	Parking (pole)
PK11	Public Parking	Parking Lot	2nd St near Market		K	1A	Parking (pole)
PK12	Public Parking	Parking Lot	Main St near Market		H	1A	Parking (post)
PK13	Public Parking	Parking Lot	Respess St near 2nd		H	1A	Parking (post)
PK14	Public Parking	Parking Lot	Gladden between Main & 2nd		H	1A	Parking (post)
PK16	Public Parking	Parking Lot	Water St near Market		H	1A	Parking (post)
PK17	Public Parking	Parking Lot	Market St just after 3rd		H	1A	Parking (post)
PK25	Public Parking	Parking Lot	Market between Main & 2nd		H	1A	Parking (post)

Number of Signs (Phase 1A)

Type of Sign	Phase 1A No.
Secondary Destination	16
Primary Gateway	3
Secondary Gateway	2
Parking (post)	7
Parking (pole)	7
Total Signs	35

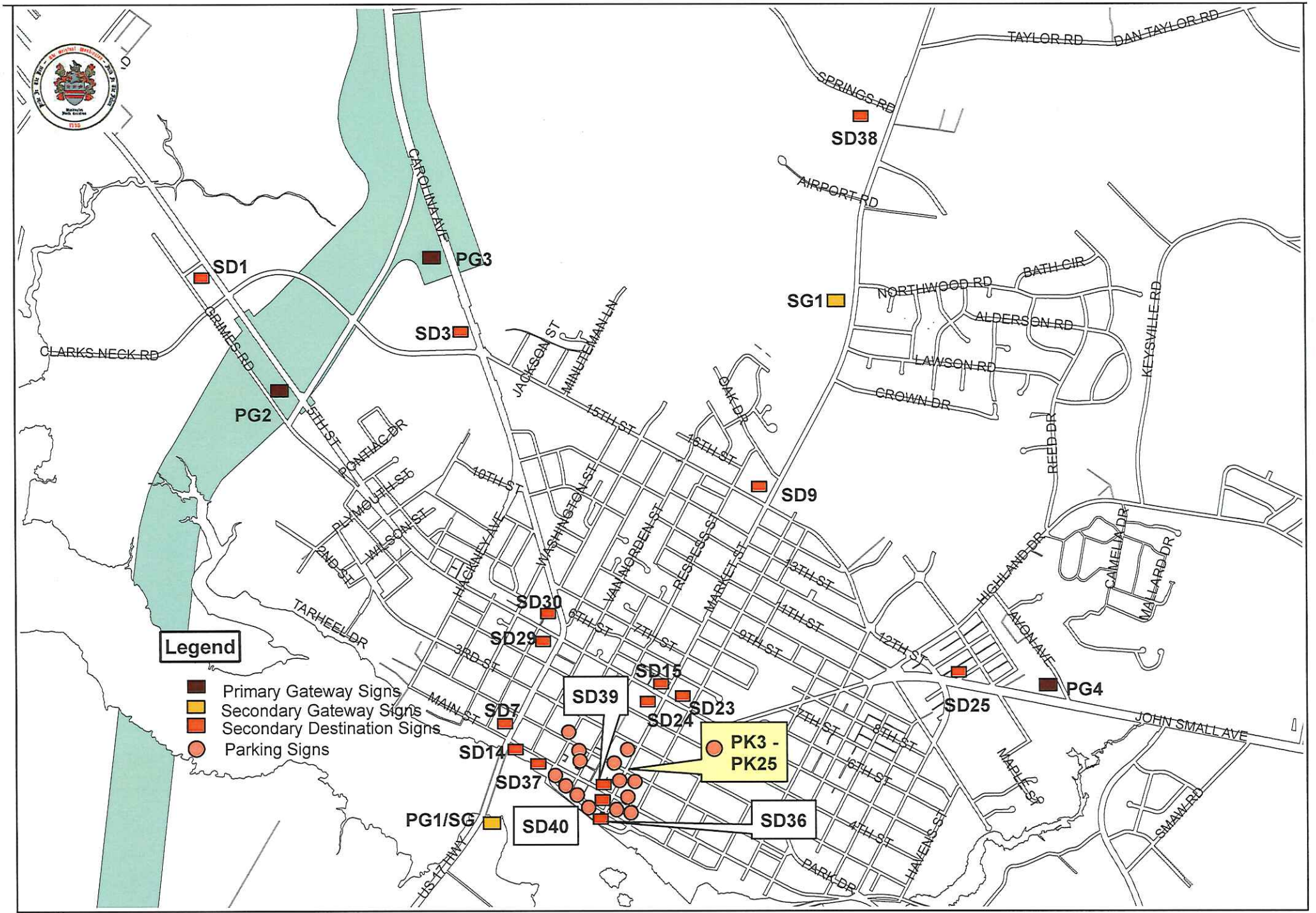

City of Washington

Wayfinding Signage Program

Map - Phase 1A

1 inch = 2,100 feet

0 385 770 1,540 Feet

City of Washington

Wayfinding Signage

N W E S

1 inch = 350 feet

0 60 120 240 Feet

City of Washington
Wayfinding Signage Program

Base Bid

Appendix B:

Phase 1A
Sign Type
Sign Message Plan

Secondary Destination Sign – SD1
Phase 1A

Secondary Destination
Sign
SD3
Phase 1A

Secondary Destination
Sign
SD7
Phase 1A

Secondary Destination
Sign
SD9
Phase 1A

Secondary Destination
Sign
SD14
Phase 1A

Secondary Destination Sign
SD15
Phase 1A

Secondary Destination
Sign
SD23
Phase 1A

Secondary Destination
Sign
SD24
Phase 1A

Secondary Destination Sign
SD25
Phase 1A

Secondary Destination
Sign
SD29
Phase 1A

Secondary Destination Sign
SD30
Phase 1A

Secondary Destination
Sign
SD36
Phase 1A

Secondary Destination
Sign
SD37
Phase 1A

Secondary Destination Sign
SD38
Phase 1A

Secondary Destination
Sign
SD39
Phase 1A

Secondary Destination
Sign
SD40
Phase 1A

Primary Gateway Sign
PG2
Phase 1A

Primary Gateway Sign
PG3
Phase 1A

Primary Gateway Sign
PG4
Phase 1A

Secondary Gateway Sign
PG1 / SG
Phase 1A

Secondary Gateway Sign
SG1
Phase 1A

Parking Sign (Pole)
PK3
Phase 1A

Parking Sign (Pole)
PK5
Phase 1A

Parking Sign (Pole)
PK6
Phase 1A

Parking Sign (Pole)
PK7
Phase 1A

Parking Sign (Pole)
PK8
Phase 1A

Parking Sign (Pole)
PK10
Phase 1A

Parking Sign (Pole)
PK11
Phase 1A

Parking Sign (Post)
PK4
Phase 1A

Parking Sign (Post)
PK12
Phase 1A

Parking Sign (Post)
PK13
Phase 1A

Parking Sign (Post)
PK14
Phase 1A

Parking Sign (Post)
PK16
Phase 1A

Parking Sign (Post)
PK17
Phase 1A

Parking Sign (Post)
PK25
Phase 1A

City of Washington
Wayfinding Signage Program

Alternate Bid

Appendix C:

Phase 1B
Proposed Sign Index
and Map

City of Washington Wayfinding Signage Program
Proposed Signs - Phase 1B

No.	Description	Type	Location	Estimate	Design	Phase	Reason
SD2	McConnell Sports Complex Historic Downtown Waterfront Visitors Center Festival Park	Secondary Destination	Clarks Neck off 5th		J	1B	To direct drivers from the outskirts of town to nearby destinations
SD8	Airport McConnell Sports Complex Historic Downtown Washington Visitors Center	Secondary Destination	15th & Market East Bound		J	1B	To direct eastbound drivers to nearby destinations or toward the hospital
SD11	Airport McConnell Sports Complex Aquatics Center	Secondary Destination	Market & 13th North Bound		J	1B	To direct northbound drivers to proceed to northern destinations or to turn toward the hospital
SD13	Historic Downtown Waterfront NC Estuarium Visitors Center Festival Park	Secondary Destination	River Road West Bound		J	1B	To direct westbound drivers from River Road toward downtown, hospital or boat ramp
SD19	Visitors Center Civic Center Festival Park Turnage Theater	Secondary Destination	2nd @ Respess West Bound		J	1B	To direct westbound downtown drivers to nearby destinations
SD20	Turnage Theater Visitors Center Festival Park	Secondary Destination	Respess @ Main South Bound		J	1B	To direct downtown drivers toward destinations and parking
SD22	Havens Gardens Festival Park NC Estuarium Parking	Secondary Destination	Main @ Bonner East Bound		J	1B	To direct downtown drivers toward destinations and parking
SD34	Historic Downtown Waterfront NC Estuarium Visitors Center Festival Park	Secondary Destination	3rd @ Market Street East Bound		J	1B	To direct westbound 3rd Street drivers downtown
SD35	Historic Downtown Waterfront NC Estuarium Visitors Center Festival Park	Secondary Destination	3rd @ Market Street West Bound		J	1B	To direct eastbound 3rd Street drivers downtown

No.	Description	Type	Location	Estimate	Design	Phase	Reason
SD41	Historic Downtown Waterfront NC Estuarium Visitors Center Festival Park	Secondary Destination	Market & 3rd South Bound		J	1B	To direct southbound Market Street drivers toward downtown destinations
PK15	Public Parking	Parking Lot	Bridge between Main & 2nd		H	1B	Parking (post)
PK18	Public Parking	Parking Lot	Main before Gladden East Bound		H	1B	Parking (post)
DI9	Festival Park	Destination Identity	Festival Park		D	1B	Destination Signifier
DG2	Downtown Harbor District	Downtown Gateway	Market @ 3rd SW Bound		D	1B	To welcome SW bound drivers downtown
DG3	Downtown Harbor District	Downtown Gateway	Main @ Gladden East Bound		D	1B	To welcome eastbound drivers downtown

Type of Sign	**Phase 1B No.**
Secondary Destination	**10**
Primary Gateway	**0**
Secondary Gateway	**0**
Downtown Gateway	**2**
Parking (post)	**2**
Parking (pole)	**0**
Destination Identity	**1**
Total Signs	**15**

City of Washington

Wayfinding Signage Program

Map - Phase 1B

1 inch = 1,800 feet

Feet
0 325 650 1,300

City of Washington
Wayfinding Signage Program

Alternate Bid

Appendix D:

Phase 1B
Sign Type
Sign Message Plan

Secondary Destination Sign – SD2
Phase 1B

Secondary Destination Sign
SD8
Phase1B

Secondary Destination Sign
SD11
Phase 1B

Secondary Destination Sign
SD13
Phase 1B

Secondary Destination
Sign
SD19
Phase 1B

Secondary Destination
Sign
SD20
Phase 1B

Secondary Destination
Sign
SD22
Phase 1B

Secondary Destination
Sign
SD34
Phase 1B

Secondary Destination
Sign
SD35
Phase 1B

Secondary Destination Sign
SD41
Phase 1B

Parking Sign (Post)
PK15
Phase 1B

Parking Sign (Post)
PK18
Phase 1B

Destination Identity
Sign
DI19
Phase 1B

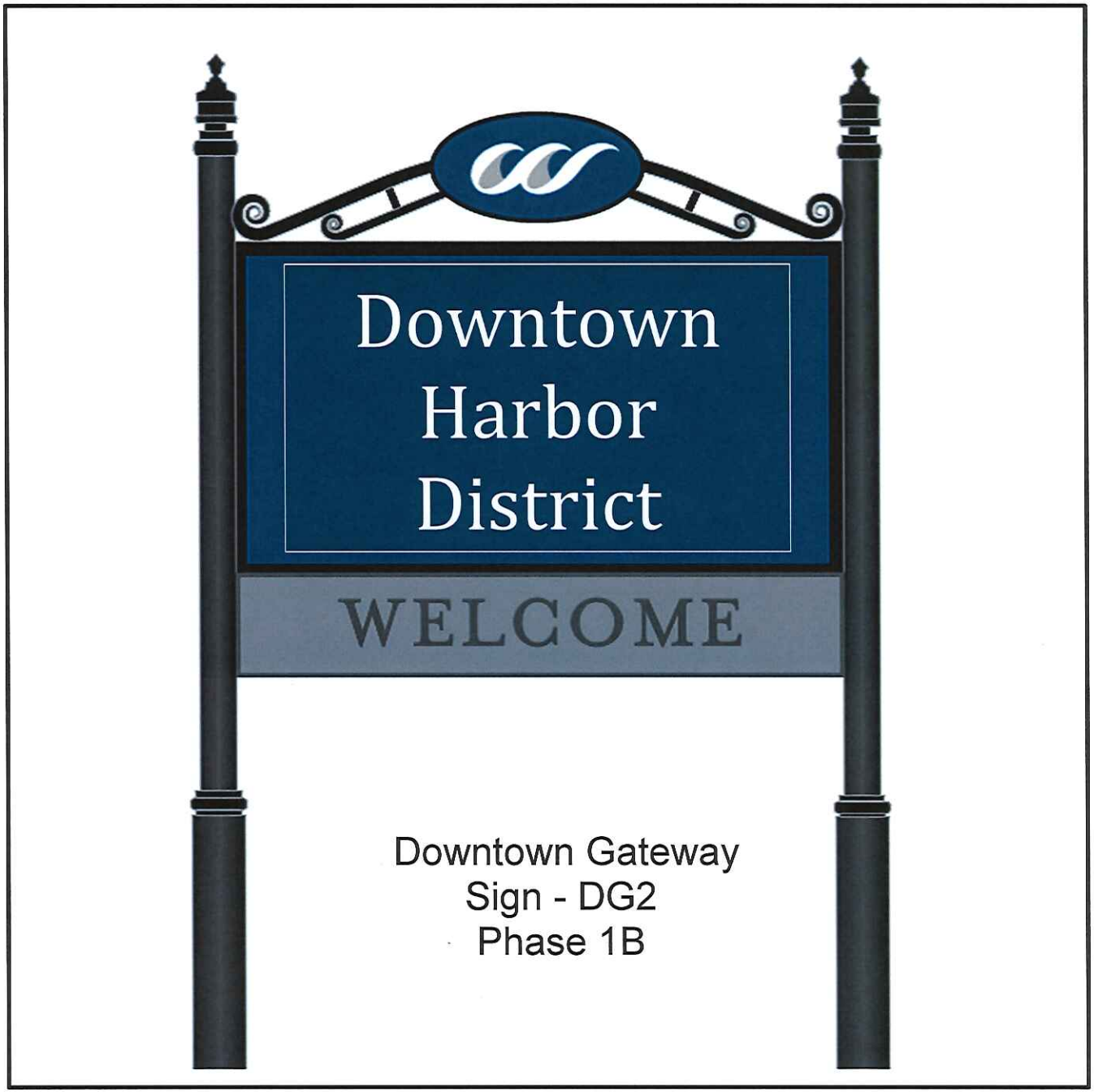

Downtown Gateway
Sign - DG2
Phase 1B

Downtown Gateway
Sign – DG3
Phase 1B

City of Washington
Wayfinding Signage Program

Appendix E:

Final Sign Concepts
Sign Specifications

CITY OF WASHINGTON, NC WAYFINDING SYSTEM

FINAL CONCEPT

A B C

CITY OF WASHINGTON, NC WAYFINDING SYSTEM

FINAL CONCEPT

CITY OF WASHINGTON, NC WAYFINDING SYSTEM

FINAL CONCEPT

I J K

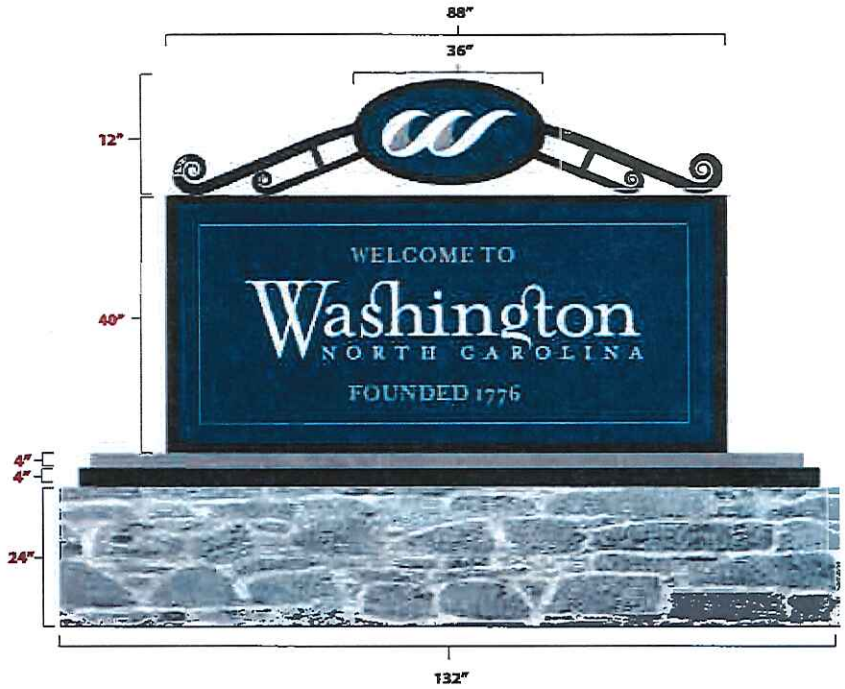

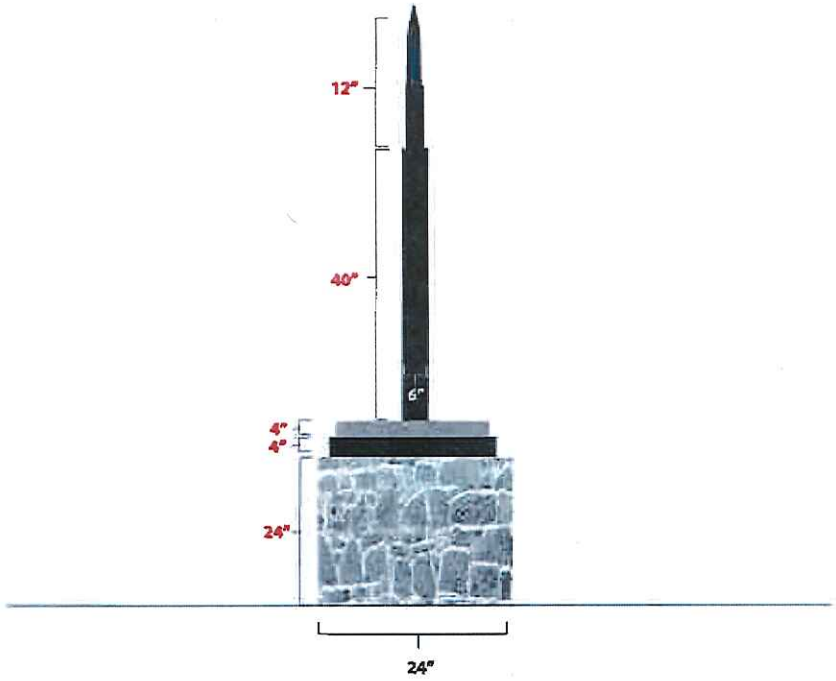

SPECIFICATIONS - Monument - Welcome to Washington Sign

SIGN
SURFACE PROCSS: Paint all exposed surfaces
FOOTER: Concrete Base

DECORATIVE BASE
MATERIAL: Concrete & Stone Masonry
FABRICATION PROCESS: Cast
EDGES: Smooth
Color: Black
SURFACE: Paint all exposed surfaces

SIGN PANEL
MATERIAL: 1/4" thick aluminum
FABRICATION PROCESS: Square Cut
EDGES: Square
COLOR: Custom as noted
SURFACE PROCESS: Paint all exposed surfaces
FASTENER: Mechanically fasten to backer panel

High-Intensity Retroreflective Vinyl Graphics applied to front face of Sign Panel.

NOTES

1. Fabricator to verify the mounting conditions and provide a detailed drawing for each mounting situation prior to fabrication.
2. Welds: All welds shall be ground smooth, paint all seams.
3. Hardware: All exposed hardware shall be tamper-proof fasteners.

These drawings are meant for DESIGN INTENT ONLY and are not for construction. Contractor shall verify and be responsible for all dimensions and conditions on the job. Contractor shall be familiar with the site conditions it presents. This office must be notified of any variations from the dimensions and conditions shown on this drawing. Shop drawings and details must be submitted to this office for approval prior to proceeding with fabrication. All copy shall be proofread by client and legal requirements checked by legal department.

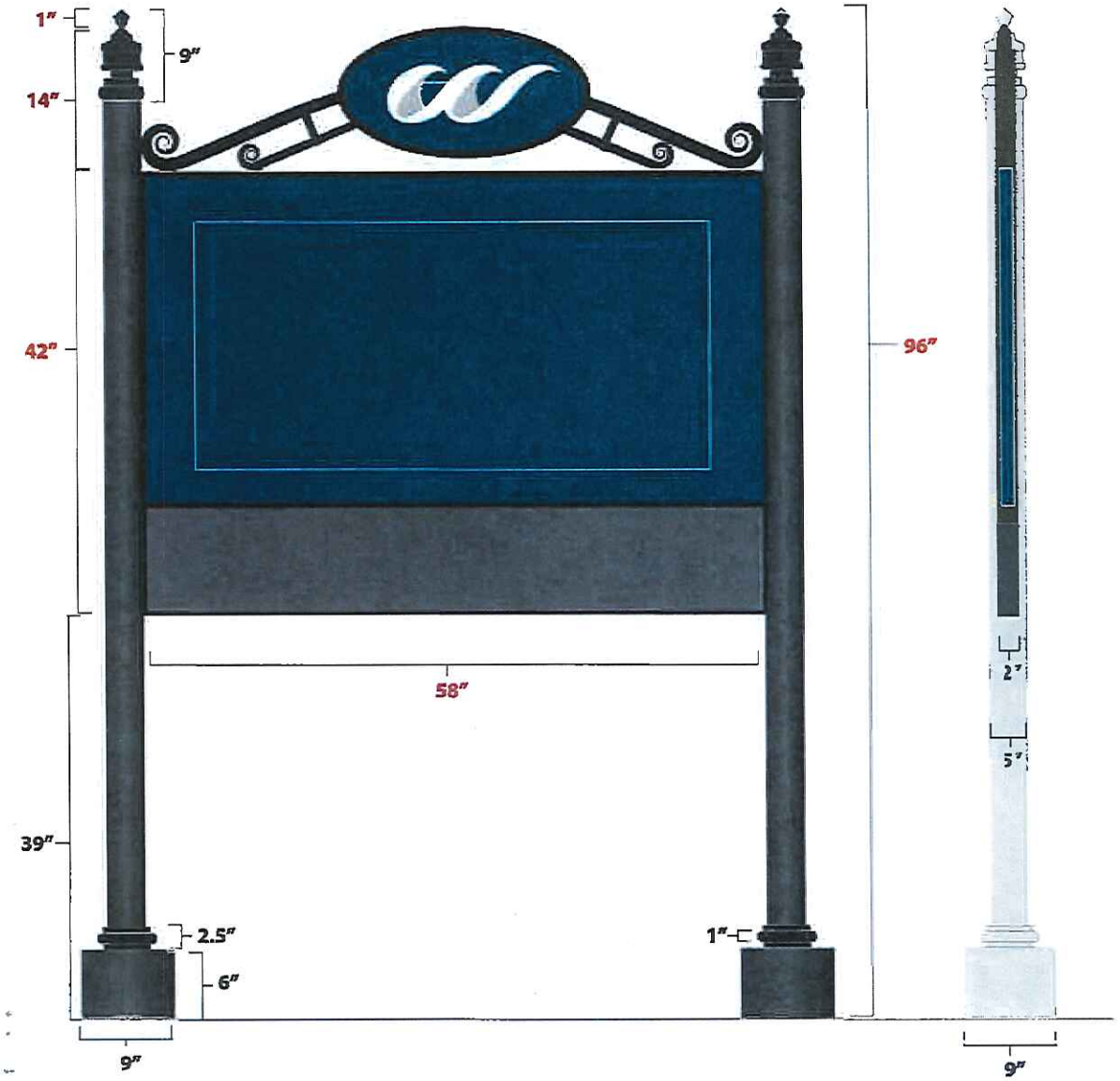

SPECIFICATIONS - Double-Post District Identity/Welcome Sign

POLE
POLE: 5" dia. 1/4" thick aluminum
MATERIAL: Aluminum
FABRICATION PROCESS: Extruded
EDGES: Smiith
COLOR: Black
SURFACE PROCSS: Paint all exposed surfaces
FOOTER: TRANSPO Polesafe Breakaway footer

DECORATIVE BASE
MATERIAL: Aluminum
FABRICATION PROCESS: Cast
EDGES: Smooth
Color: Black
SURFACE: Paint all exposed surfaces
NOTE: Include manufacturer approved aluminum skirt, as needed to conceal footer. Skirt to be welded to decorative base and painted to match decorative base.

SIGN PANEL
MATERIAL: 1/4" thick aluminum
FABRICATION PROCESS: Square Cut
EDGES: Square
COLOR: Custom as noted
SURFACE PROCESS: Paint all exposed surfaces
FASTENER: Mechanically fasten to backer panel

High-Intensity Retroreflective Vinyl Graphics applied to front face of Sign Panel.

NOTES

1. Fabricator to verify the mounting conditions and provide a detailed drawing for each mounting situation prior to fabrication.
2. Welds: All welds shall be ground smooth, paint all seams.
3. Hardware: All exposed hardware shall be tamper-proof fasteners.

These drawings are meant for DESIGN INTENT ONLY and are not for construction. Contractor shall verify and be responsible for all dimensions and conditions on the job. Contractor shall be familiar with the site conditions it presents. This office must be notified of any variations from the dimensions and conditions shown on this drawing. Shop drawings and details must be submitted to this office for approval prior to proceeding with fabrication. All copy shall be proofread by client and legal requirements checked by legal department.

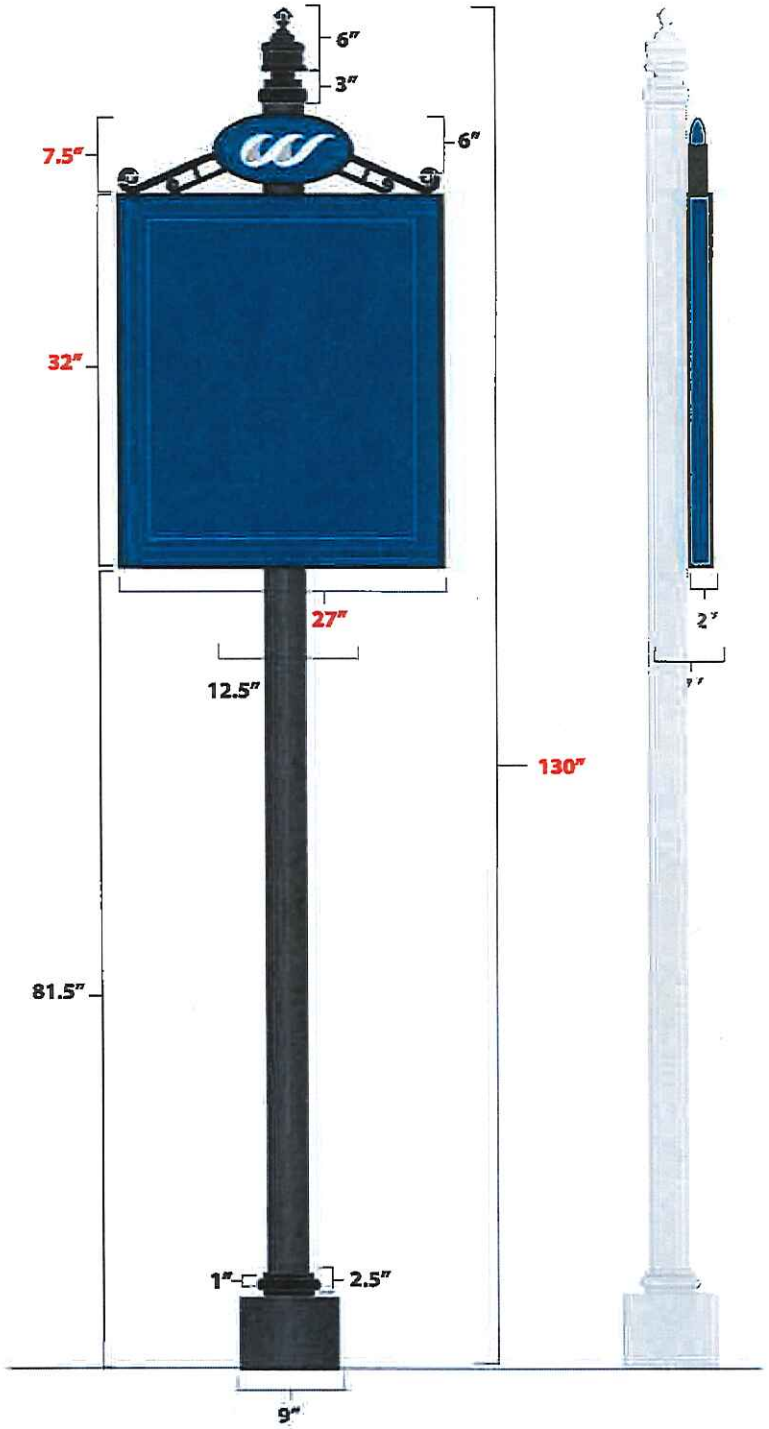

SPECIFICATIONS - Single-Post Destination Sign

POLE
POLE: 5" dia. 1/4" thick aluminum
MATERIAL: Aluminum
FABRICATION PROCESS: Extruded
EDGES: Smiith
COLOR: Black
SURFACE PROCSS: Paint all exposed surfaces
FOOTER: TRANSPO Polesafe Breakaway footer

DECORATIVE BASE
MATERIAL: Aluminum
FABRICATION PROCESS: Cast
EDGES: Smooth
Color: Black
SURFACE: Paint all exposed surfaces
NOTE: Include manufacturer approved aluminum skirt, as needed to conceal footer. Skirt to be welded to decorative base and painted to match decorative base.

SIGN PANEL
MATERIAL: 1/4" thick aluminum
FABRICATION PROCESS: Square Cut
EDGES: Square
COLOR: Custom as noted
SURFACE PROCESS: Paint all exposed surfaces
FASTENER: Mechanically fasten to backer panel

High-Intensity Retroreflective Vinyl Graphics applied to front face of Sign Panel.

NOTES

1. Fabricator to verify the mounting conditions and provide a detailed drawing for each mounting situation prior to fabrication.
2. Welds: All welds shall be ground smooth, paint all seams.
3. Hardware: All exposed hardware shall be tamper-proof fasteners.

These drawings are meant for DESIGN INTENT ONLY and are not for construction. Contractor shall verify and be responsible for all dimensions and conditions on the job. Contractor shall be familiar with the site conditions it presents. This office must be notified of any variations from the dimensions and conditions shown on this drawing. Shop drawings and details must be submitted to this office for approval prior to proceeding with fabrication. All copy shall be proofread by client and legal requirements checked by legal department.

SD

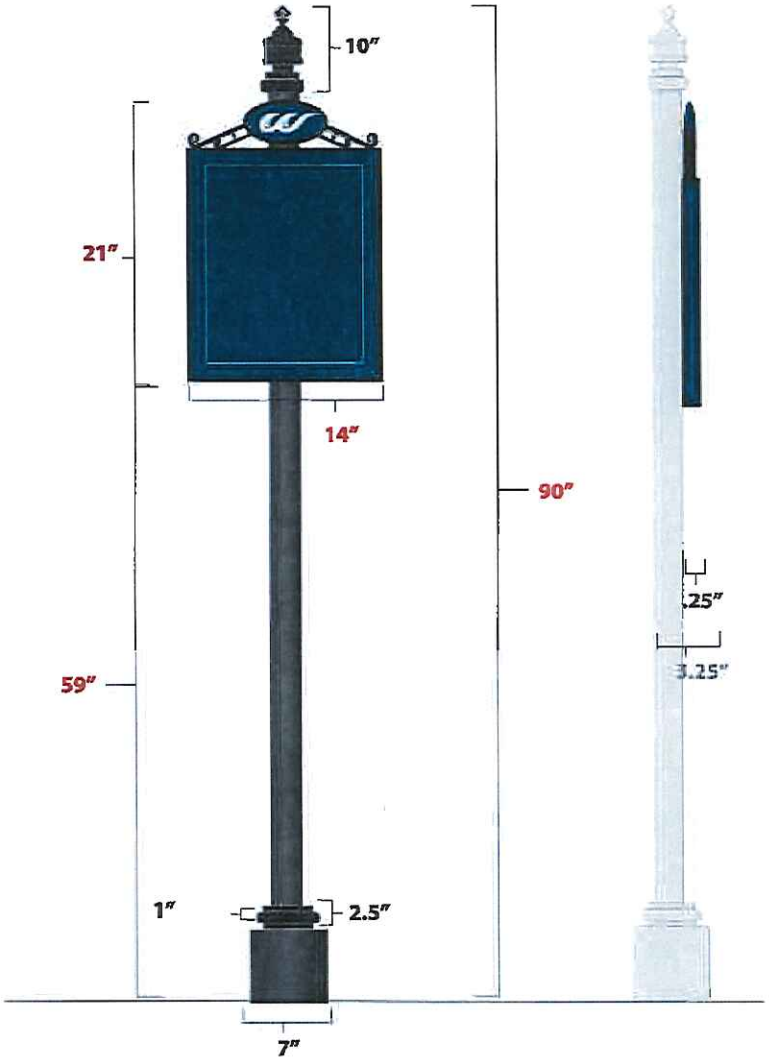

SPECIFICATIONS - Single-Post Parking Sign

POLE
POLE: 3" dia. 1/4" thick aluminum
MATERIAL: Aluminum
FABRICATION PROCESS: Extruded
EDGES: Smiith
COLOR: Black
SURFACE PROCSS: Paint all exposed surfaces
FOOTER: TRANSPO Standard footer for material specs

DECORATIVE BASE
MATERIAL: Aluminum
FABRICATION PROCESS: Cast
EDGES: Smooth
Color: Black
SURFACE: Paint all exposed surfaces
NOTE: Include manufacturer approved aluminum skirt, as needed to conceal footer. Skirt to be welded to decorative base and painted to match decorative base.

SIGN PANEL
MATERIAL: 1/4" thick aluminum
FABRICATION PROCESS: Square Cut
EDGES: Square
COLOR: Custom as noted
SURFACE PROCESS: Paint all exposed surfaces
FASTENER: Mechanically fasten to backer panel

High-Intensity Retroreflective Vinyl Graphics applied to front face of Sign Panel.

NOTES

1. Fabricator to verify the mounting conditions and provide a detailed drawing for each mounting situation prior to fabrication.
2. Welds: All welds shall be ground smooth, paint all seams.
3. Hardware: All exposed hardware shall be tamper-proof fasteners.

These drawings are meant for DESIGN INTENT ONLY and are not for construction. Contractor shall verify and be responsible for all dimensions and conditions on the job. Contractor shall be familiar with the site conditions it presents. This office must be notified of any variations from the dimensions and conditions shown on this drawing. Shop drawings and details must be submitted to this office for approval prior to proceeding with fabrication. All copy shall be proofread by client and legal requirements checked by legal department.

SPECIFICATIONS - Light-Post Sign

POLE
Existing Light Posts

SIGN PANEL
MATERIAL: 1/8" thick aluminum
FABRICATION PROCESS: Square Cut
EDGES: Square
COLOR: Custom as noted
SURFACE PROCESS: Paint all exposed surfaces
FASTENER: Mechanically fasten to light post

High-Intensity Retroreflective Vinyl Graphics applied to front face of Sign Panel.

NOTES

1. Fabricator to verify the mounting conditions and provide a detailed drawing for each mounting situation prior to fabrication.
2. Welds: All welds shall be ground smooth, paint all seams.
3. Hardware: All exposed hardware shall be tamper-proof fasteners.

These drawings are meant for DESIGN INTENT ONLY and are not for construction. Contractor shall verify and be responsible for all dimensions and conditions on the job. Contractor shall be familiar with the site conditions it presents. This office must be notified of any variations from the dimensions and conditions shown on this drawing. Shop drawings and details must be submitted to this office for approval prior to proceeding with fabrication. All copy shall be proofread by client and legal requirements checked by legal department.

City of Washington
Wayfinding Signage Program

Appendix Forms:

Letter of Transmittal
Bid Form
Warranty/Guarantee

City of Washington
NORTH CAROLINA

LETTER OF TRANSMITTAL

I, _____, (title) _____

for (company)_____, confer this statement of transmittal with the submission of our proposal to the City of Washington.

(company)_____is submitting this proposal in full receipt and understanding of the terms provided by the City for the RFP- Wayfinding Signage Program – Fabrication and Installation. I am submitting this proposal as an authorized representative of (company)_____ and fully capable of binding the company contractually.

_____

Company

_____

Authorized Signer Signature

_____

Title

_____

Date

City of Washington
NORTH CAROLINA

BID FORM

WASHINGTON WAYFINDING SIGNAGE PROGRAM

The Bidder agrees to perform all the work as shown on the plans and specifications, and of furnish all labor, tools, equipment, transportation and all other incidentals necessary for completion of WASHINGTON WAYFINDING SIGNAGE PROGRAM.

In compliance with the Notice to Bidders, Instructions to Bidders, the Contract Documents which include the contract plans and specifications titled "WASHINGTON WAYFINDING SIGNAGE" and all addenda issued to date, all of which are part of this proposal, the undersigned hereby proposes to furnish and install all materials, labor, and equipment called for by, and in strict accordance with, said Contract Documents, for the complete Scope of Work indicated:

TOTAL BASE BID (lump sum) **Phase 1A** $_____

_____

Write out total dollar amount in words

PER UNIT COST: total must equal Base Bid above.

Sign Quantity	Sign Type	Per Unit Fabrication Cost	Per Unit Installation Cost	Total Cost
16	Secondary Destination Signs	$	$	$
3	Primary Gateway Signs	$	$	$
2	Secondary Gateway Signs	$	$	$
7	Parking Signs (post)	$	$	$
7	Parking Sign (pole attached)	$	$	$
Shop Drawings				$
Total Base Bid				$

BID FORM

TOTAL ALTERNATE BID (lump sum) **Phase 1B** $ _____

_____

Write out total dollar amount in words

PER UNIT COST: total must equal Alternate Bid above.

Sign Quantity	Sign Type	Per Unit Fabrication Cost	Per Unit Installation Cost	Total Cost
10	Secondary Destination Signs	$	$	$
2	Downtown Gateway Signs	$	$	$
2	Parking Signs (post)	$	$	$
1	Destination Identity Sign	$	$	$
Shop Drawings				$
Total Alternate Bid				$

- The bid amounts shall be shown in both words and figures. In case of discrepancy, the amount in words shall govern.
- The above prices for sign fabrication cost shall include signs, posts, hardware, materials, shipping, taxes, overhead, profit, etc., to cover the finished work called for.
- The above prices for installation cost shall include mobilization, equipment, materials, travel expenses, site repair, clean-up, overhead, profit, etc., to cover the finished work called for.
- The above price for shop drawings cost shall include site surveys, engineering, production drawings, submittals, samples, overhead, profit, etc., to cover the finished work called for.
- The Bidder agrees that this bid shall be valid and may not be withdrawn for a period of 90 calendar days after the scheduled closing time for receiving bids.
- Bidder has examined copies of all the Bidding Documents and of the following Addenda (receipt of all which is hereby acknowledged):

BID FORM

Date	Addendum Number
_____	_____
_____	_____
_____	_____

Respectfully submitted this _____ day of _____, 2016.

_____

Company

City of Washington
NORTH CAROLINA

WARRANTY/GUARANTEE

We hereby warranty and guarantee the signs, which we have delivered in accordance with the provisions of the City of Washington Wayfinding Signage Program, for five years from the date of delivery and acceptance by the City of Washington.

We warrant and guarantee that the materials and finishes furnished under this contract are the highest quality and new unless otherwise required or permitted by the contract documents; that the work will be free from defects not inherent in the quality required or permitted; and that the work conforms with the requirements of the contract documents.

We agree to repair or replace, to the satisfaction of the City of Washington, any or all work not conforming to the contract documents, including substitutions not properly approved and authorized, workmanship or materials that prove defective within the warranty/guarantee period. This warranty/guarantee excludes remedy for damage or defect caused by abuse, modifications not executed by the Vendor or normal wear and tear under normal usage. Any work which may be damaged or displaced by the abuse, modifications not executed by the Vendor, improper, or insufficient maintenance, or improper operation shall also be excluded.

Any repairs or replacements shall bear an additional 12 month guarantee, in addition to any remaining warranty period, as herein stated, dated from the final acceptance of repairs or replacement.

In the event of our failure to comply with the above-mentioned conditions within a reasonable time after being notified in writing, we collectively and separately do hereby authorize the City of Washington to proceed to have defects repaired and made good at our expense, and will pay the costs and chargers; therefore, immediately upon demand.

_____
Signature of Vendor

_____
Date